PRODUCT SHEET

Snap Frame Standard 70x100 cm Mitred Corners 25 mm Wood

KR70x100G25LB

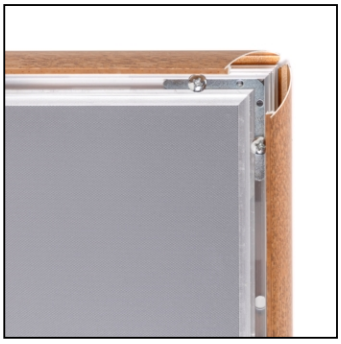

- **Cost effective, elegant display solution for 70x100cm posters**
- **Quick poster replacement**
- **Perfect for large sized messages**

PRODUCT SHEET

Snap Frame Standard 70x100 cm Mitred Corners 25 mm Wood

KR70x100G25LB

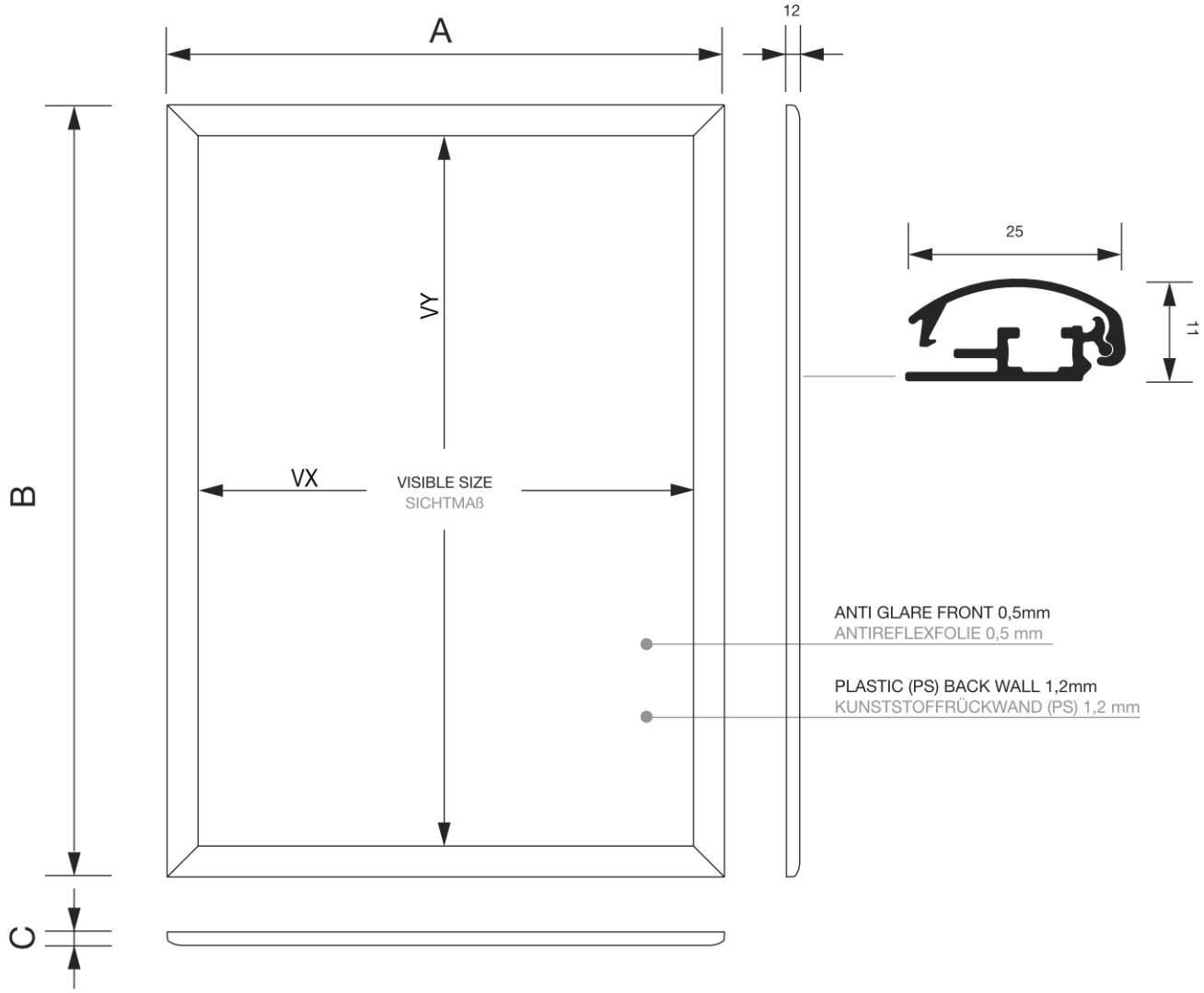

BACK VIEW
RÜCKANSICHT

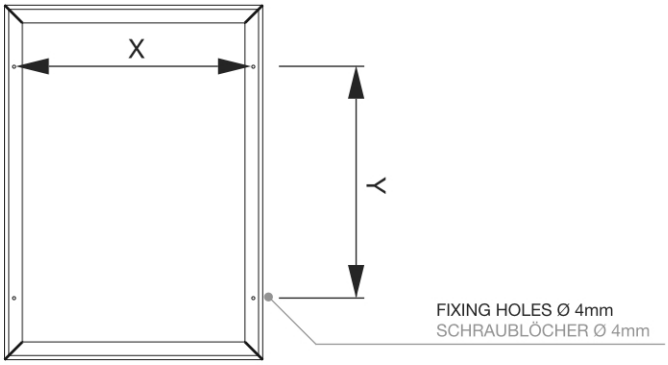

ACCESSORIES
ZUBEHÖR

(SOSSET)
SET OF SCREWS
SCHRAUBENSET

(KRHOOK)
HANGING HOOKS
HAKEN ZUM ABHÄNGEN

(HSKR)
HANGING SET
HÄNGESET

PRODUCT SHEET

Snap Frame Standard 70x100 cm Mitred Corners 25 mm Wood

KR70x100G25LB

GENERAL INFO

SKU	Sizes (mm) (A x B x C)	Format (mm)	Visible size (mm) (VXxVY)	Hole spacing (mm) (XxY)
KR70x100G25LB	731 x 1031 x 11	700 x 1000 mm	681 x 981 mm	711 x 742 mm

Orientation	Weight (kg)
Vertical	2,21

PACKAGING INFORMATION

Packaging unit 1 (mm)	Packaging unit 2 (mm)	Packaging unit 3 (mm)
1040 x 740 x 20	-	-

Palette number of pieces	Palette weight (kg)	Palette type
100	325	EUR

ADDITIONAL INFORMATION

Product certifications	EAN
No	8596052191428

SIZE GUIDE

Snap Frame Standard 70x100 cm Mitred Corners 25 mm Wood
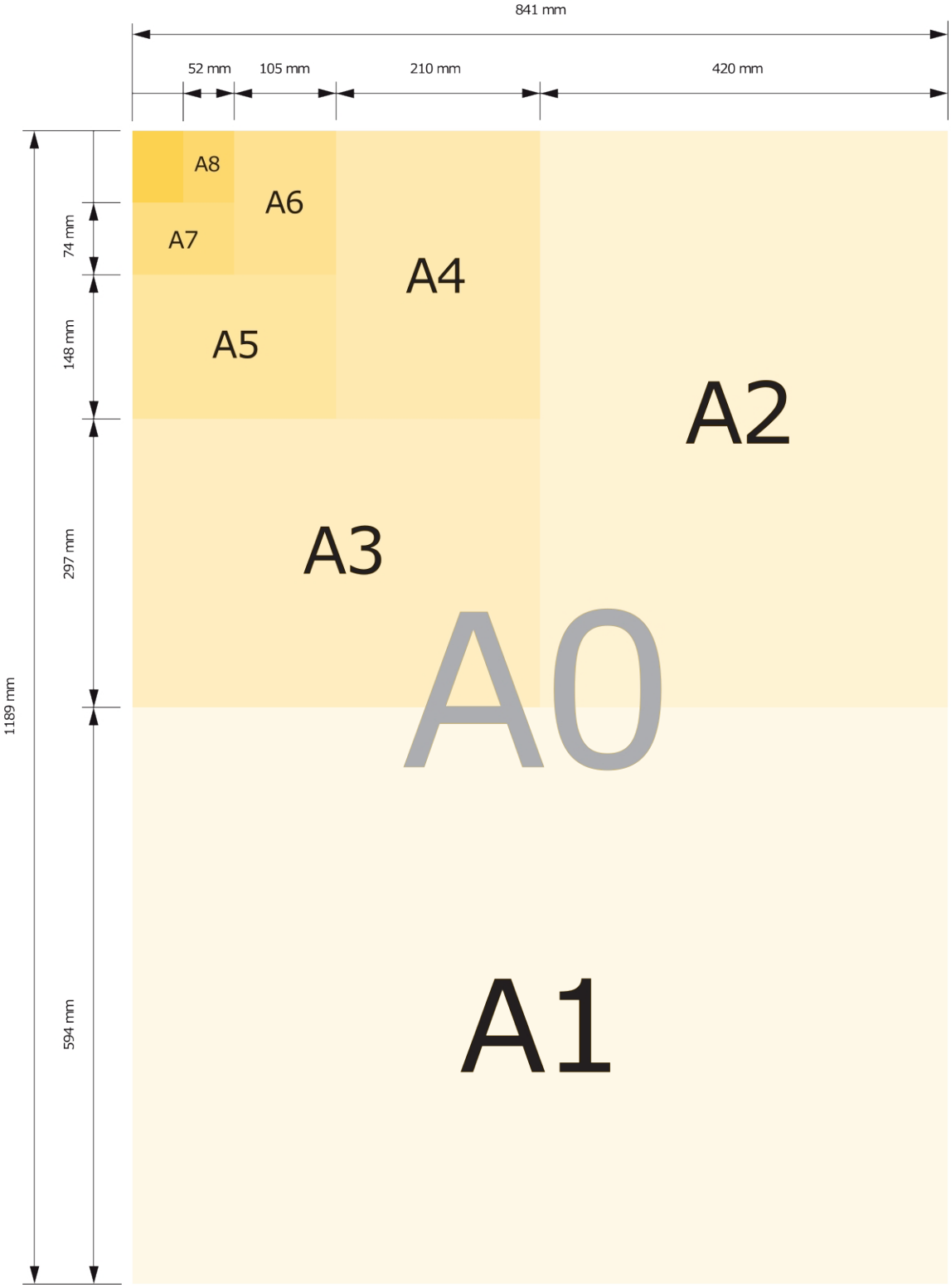
KR70x100G25LB